

How Much Fabric Do You Need? A Simple Estimation Guide

Description



Starting a new sewing project is always exciting. But there is nothing more frustrating than running out of fabric halfway throughâ?¦ or ending up with scraps that arenâ??t quite big enough for anything useful (trust me, Iâ??ve been there! I have a whole drawer full of pieces like this).

If youâ??re working with a commercial or indie sewing pattern, you are in luck! They usually include handy fabric requirement sections to guide your choices, and often even suggest different layouts depending on your fabric width.

But what if youâ??re drafting your own pattern? Or you have made alterations to an existing one? How can you figure out the right amount of fabric for your sewing project then?

This guide has got you covered, hopefully helping you estimate how much fabric you will need for your next make.

Note: *The two methods I focus on in this guide can be carried out either manually or digitally. For the purposes of this article, Iâ??ve demonstrated both methods digitally, but Iâ??ve included all the necessary details to help you complete them manually as well.*

While the examples centre on a basic pant pattern, the same principles can also be applied to other patterns.

Method 1: Create a mock layout

I love the almost jigsaw-like nature of laying out pattern pieces. Thereâ??s something really satisfying about the challenge of seeing how little fabric you can use by fitting the pieces together just right. Itâ??s a fun and practical way to take a sustainable approach and make the most of what youâ??ve got.

Creating a mock layout lets you do just that, but without the fabric!

Step 1: Collate the pattern pieces

Gather all the pattern pieces that will be required and take note of the following:

- Are all the seam allowances included?
- How many of each pattern piece needs to be cut (e.g. cut 1, cut 2, cut on fold, etc.)?
- Are all the pattern pieces flat and smooth to ensure accuracy during layout?

Tip: *Depending on what the pattern pieces are made from, I sometimes give them a light iron (up-and-down motion, not pressing) to smooth out any wrinkles or folds.*

Step 2: Measure the fabricâ??s width

Check the width of the fabricâ??this usually ranges from 110 cm to 140â??150 cm.

If you are unsure, simply measure from selvedge to selvedgeâ??the tightly woven edge that runs along the lengthwise grain of the fabric (see Diagram 1 below).

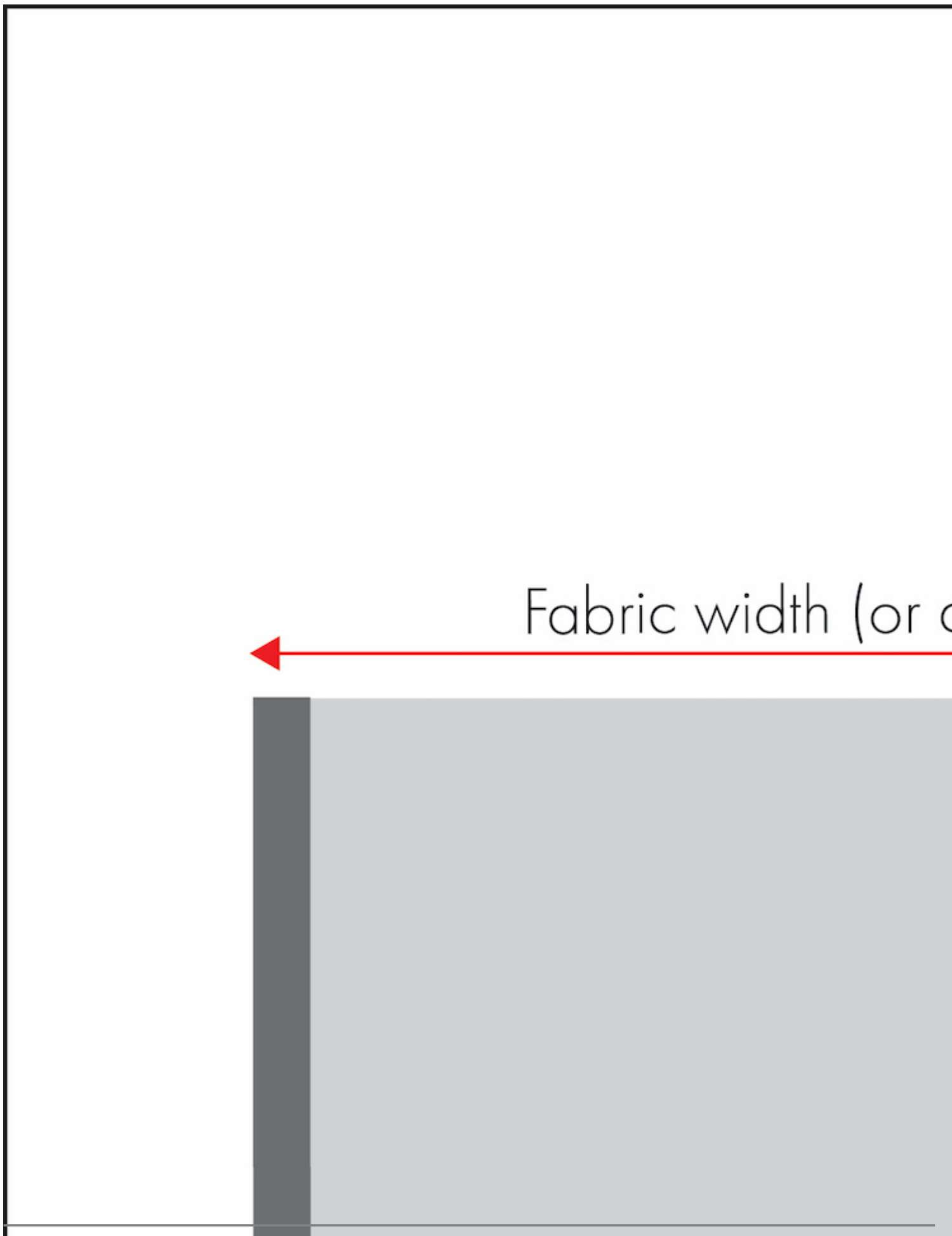
Fabric width (or

Step 3: Decide whether to work flat or folded
Whether you decide to lay the fabric flat or on the fold can depend on a few things:

- The width of the fabric.
- The shape and size of the pattern pieces.
- Whether any pieces are meant to be cut on the fold.

For example:

- If youâ??re making trousers, you might fold the fabric lengthwise to better fit the longer, narrower pieces.
- For an asymmetrical garment, like a crossover top that involves large and irregular pattern pieces, you may want to keep the fabric flat. In this instance:
  - Remember that pieces marked â??cut 2â?• (or â??cut 1 pairâ?•) will need to cut once, then flipped for the second.
  - If any pieces are cut on the fold, consider tracing or unfolding the pattern piece to create a complete one.

Step 4: Mark out the fabric area

Use masking tape, string, chalk, or any other objects to mark out the usable width of the fabric (folded or flat) on the floor, a table, or a surface that works for you.

Step 5: Lay out out the pattern pieces

Now for the fun part!
Start placing the pattern pieces within the marked area created above to see how they fit. This step often involves a bit of trial and errorâ??so donâ??t be afraid to play around until it fits the way you want it to. You may even find that one way uses much less fabric.

Remember to:

- Keep pieces a couple of centimetres away from the selvedge edge (you donâ??t necessarily want to include this in the layout).
- Be sure to maintain grainline accuracy.

In Diagram 2 below, Iâ??ve shown how you can tape out the dimensions of the fabric based on a 150cm wide fabric laid flat.

The downside of this option is that it takes up a lot of space (not ideal if youâ??re in a small space like me) and requires each pattern piece to be cut out individually.

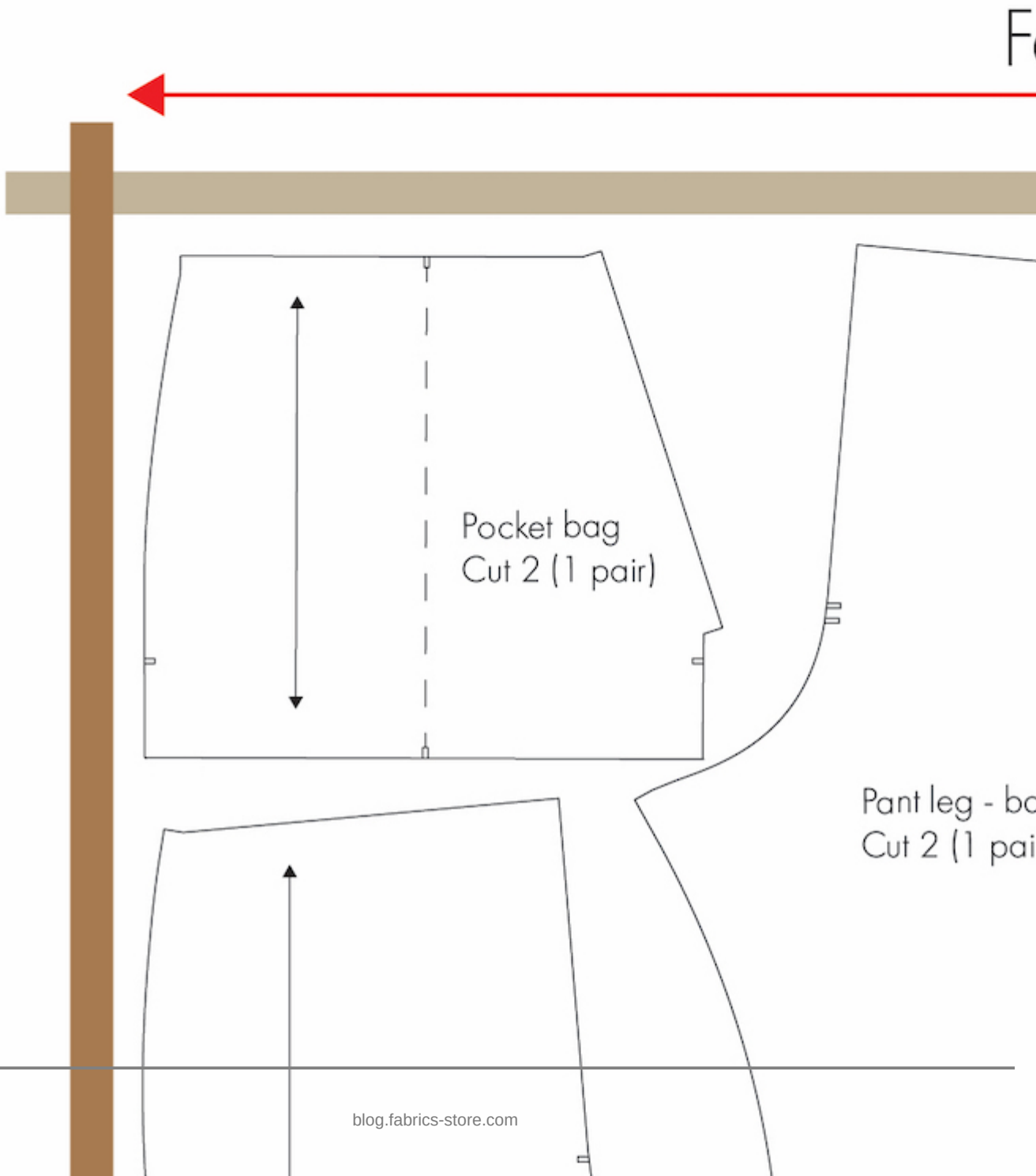
Pocket bag
Cut 2 (1 pair)
Pant leg - ba
Cut 2 (1 pai

In Diagram 3 below, I have demonstrated how to tape out the dimensions based on a 150cm wide fabric that will be folded in half. In this case, you will be working with a width of 75cm wide.

The advantage of doing it this way is that it uses less space and allows you to cut 2 pieces at onceâ??meaning less cutting overall.

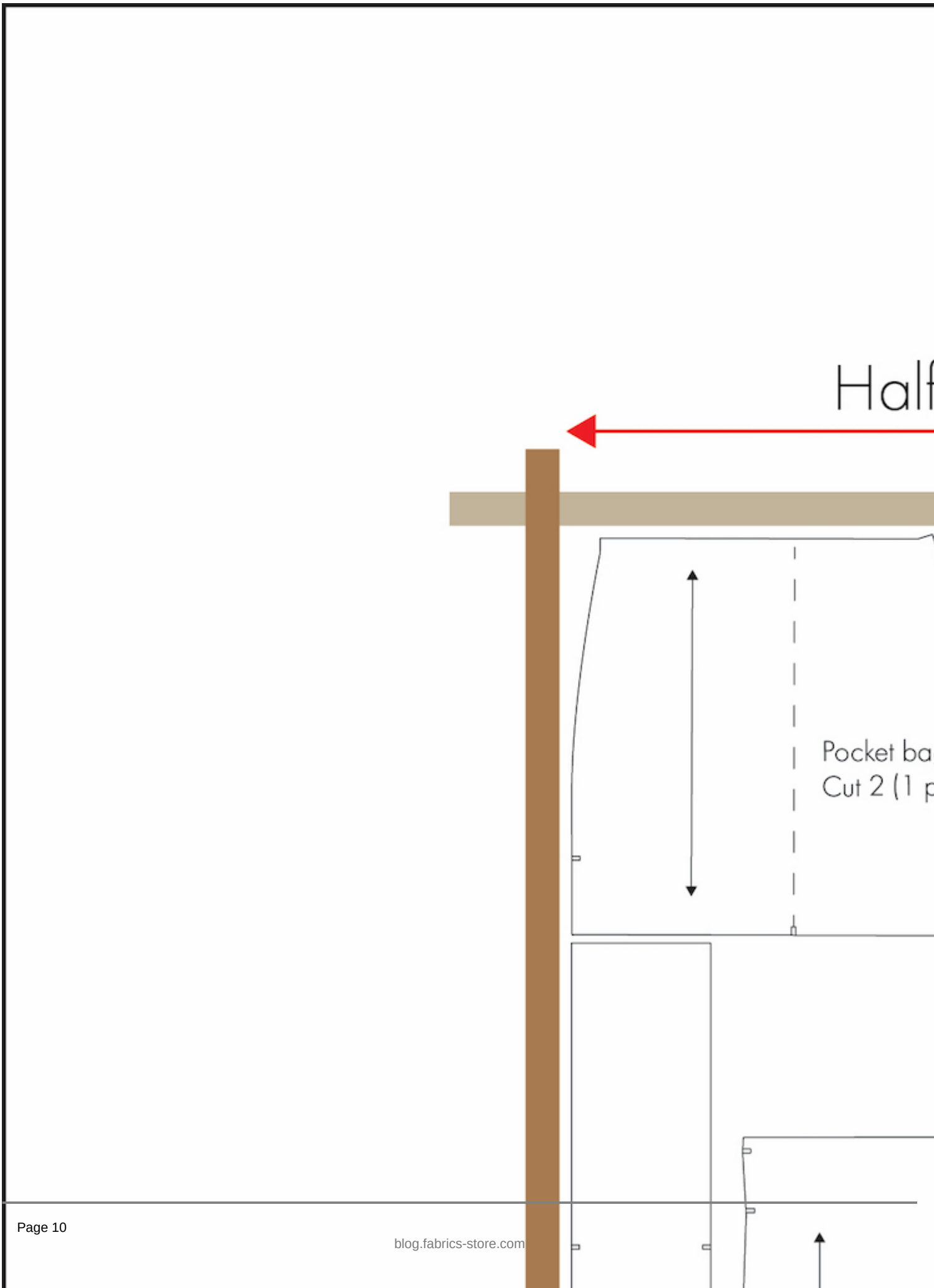
Half
Pocket ba
Cut 2 (1 p

Step 6: Measure the required fabric

Once youâ??re happy with the layout, simply measure the length of fabric used along the selvedge edge.

Step 7: Add a bit of wiggle room

I now recommend adding an extra 10â??20 cm to this measurement to allow for things like pre-washing shrinkage, fabric shifting, or layout adjustments you may make later on.

When is the mock layout method useful?

- When you want a visual reference for how the pattern pieces will be arranged.
- When you need a more accurate estimation of how much fabric is required, helping to reduce fabric waste.
- When working with large or irregularly shaped pattern pieces.
- When using directional prints or fabrics with a nap (think corduroy or velvet), where the orientation of the pattern pieces matter.

Method 2: Turn the pattern pieces into rectangles

I like to call this the *â??guesstimateâ?•* method, because while it wonâ??t be 100% precise, itâ??ll get you close enough to knowing how much fabric is required.

This method essentially involves turning the pattern pieces into rectangles to estimate the fabric use.

Step 1: Collate the pattern pieces

Gather all the pattern pieces needed and identify how many of each are required.

If any pieces are meant to be cut on the fold, consider tracing or unfolding them into full pieces for easier measuring.

Make sure all the pieces are flat and smooth to ensure accuracy.

Step 2: Measure the fabric width

Check the width of the fabric. Just like in the previous method, if you are unsure, simply measure from selvedge to selvedge.

Step 3: Turn each pattern piece into a rectangle
This is where the â??guess*timatingâ?•* happens!

Begin by measuring the widest part of each pattern piece ? this becomes the rectangleâ??s width. Then measure the longest part ? this becomes the rectangleâ??s length. At this stage, ignore any curves or shapingâ??itâ??s all about creating a rough estimation.

In Diagram 4 below, Iâ??ve identified the widest part of the pant leg front as being at the crotch, and the longest part as the distance from waist to hem. Using these points, I have created a rectangle to represent the overall space that the pattern piece will occupy.

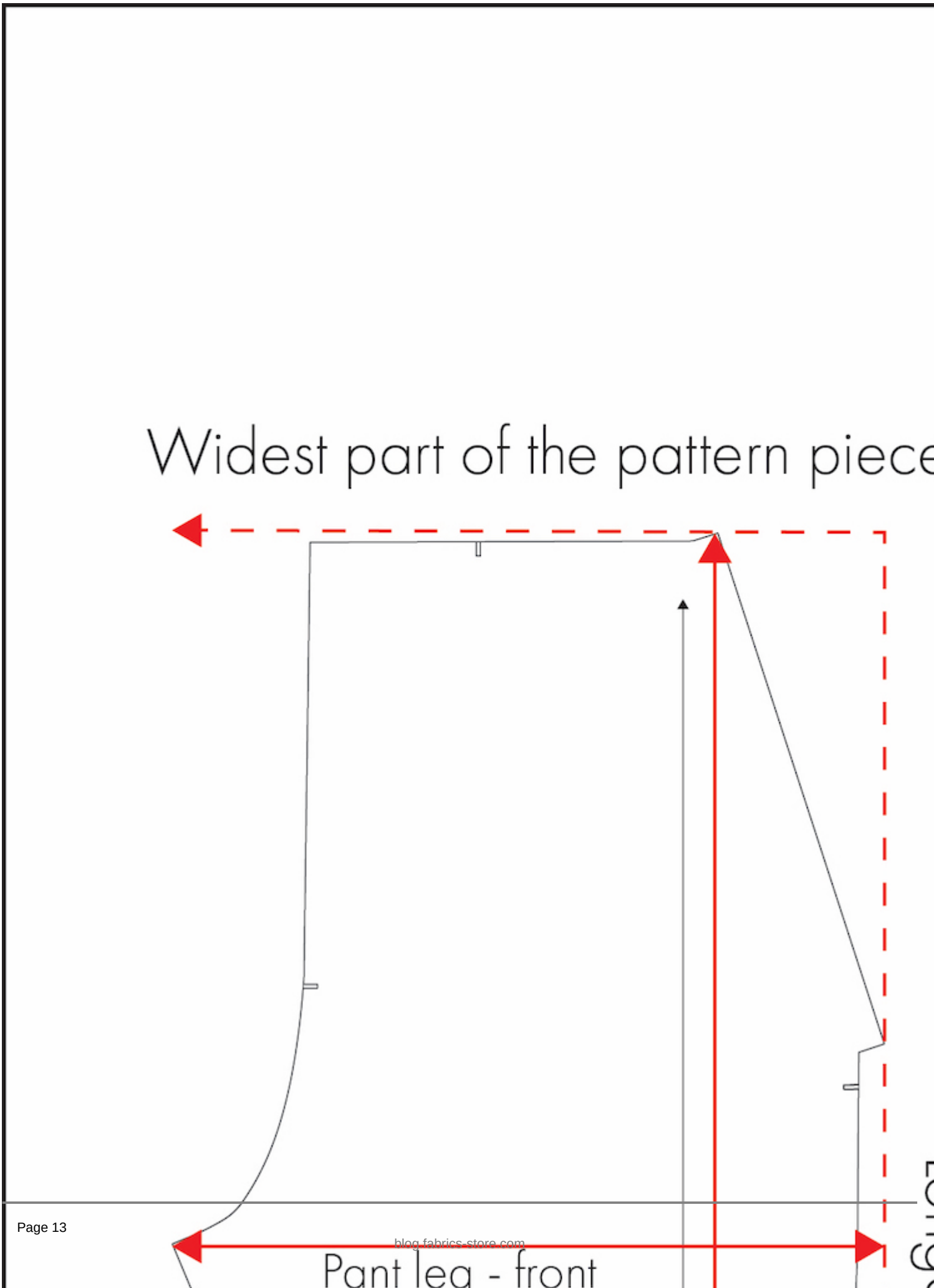

blog.fabrics-store.com

Step 4: Stack the rectangles

Now, get into the mindset of actually laying out these pattern pieces onto fabric.

Use the width of the fabric as the starting point, and begin arranging the rectangles side-by-side or top-to-bottom, depending on their size and shape. Itâ??s a bit like playing Tetris!

While this method wonâ??t provide the most efficient layout like a proper mock-up might, itâ??s a quick and helpful way to get a rough estimate of how much fabric youâ??ll need.

I will demonstrate how you might do this with the pant pattern Iâ??ve been focusing on, and fabric that is 150cm wide.

The first step is to measure each of the rectangular pattern pieces.

- Waistband (W) = 12cm wide Ã? 93cm long
- Front leg (F) = 35cm wide Ã? 107cm long
- Back leg (B) = 42cm wide Ã? 109cm long
- Pocket (P) = 34cm wide Ã? 38cm long

Now itâ??s time for a bit of simple math.

If the fabric is 150cm wide, I can fit the following rectangular pattern pieces side-by-side (refer to Diagram 5):
(W) 12 + (F) 35 + (B1) 42 + (B2) 42 = 131cm

This fits within the 150cm fabric width with a nice buffer to spare.

Next, identify the longest of these piecesâ??the back leg at 109cm. This gives us our first layout section: 109cm in length.

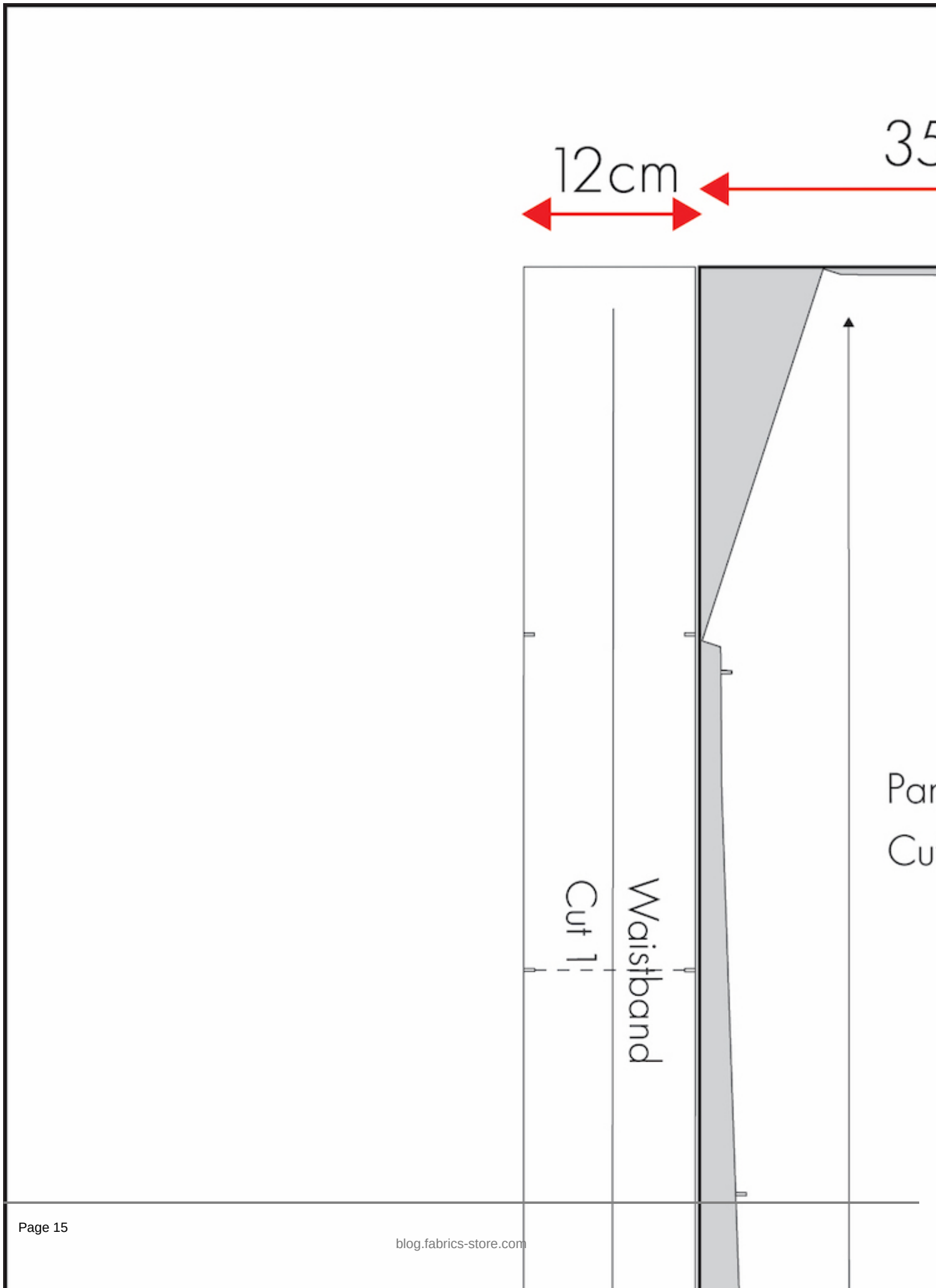
12cm
35
Par
Cu
Waistband
Cut 1

Now Iâ??m left with the front leg and 2 pockets to lay out.

Letâ??s arrange them:

(F) 35 + (P) 34 = 69cm wide

These also fit nicely across the fabric width. The pockets are small enough to easily slot in on top of each other.

Again, identify the longest of these piecesâ??the Front leg at 107cm. This gives us our second layout section: 107cm in length.

Therefore, a good estimate for the fabric length needed would start at:
Length 1 (109cm) + Length 2 (107cm) = 216cm

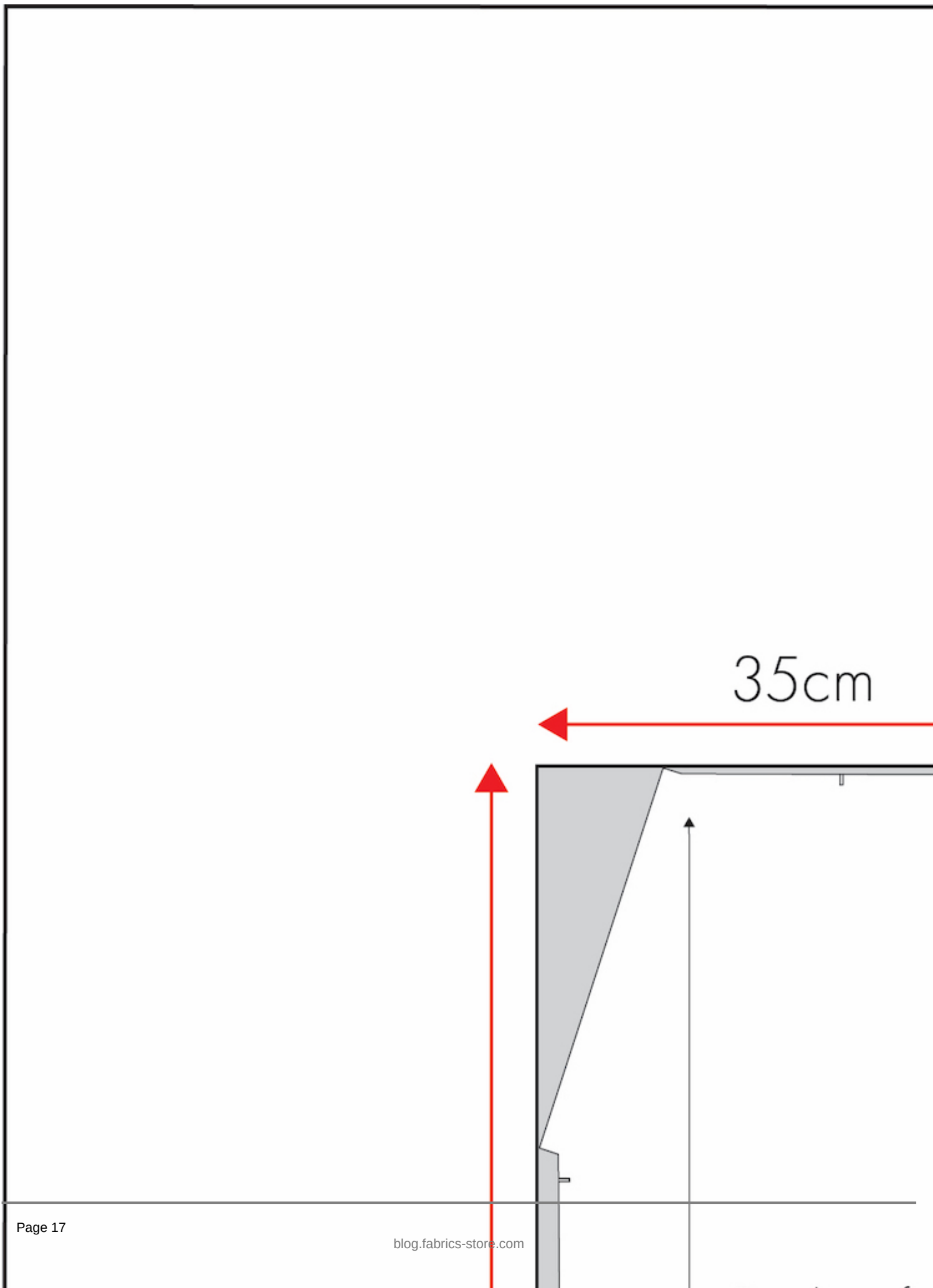
35cm

Step 5: Add a Bit of Wiggle Room

Once youâ??ve got a rough layout and total fabric length, add 10â??20 cm just in case. This extra wiggle room allows for pre-washing shrinkage, fabric shifting, or layout adjustments later on.

Therefore, as demonstrated in Diagram 7 below, a good estimate of the fabric required for these particular pants would be around 230cm.

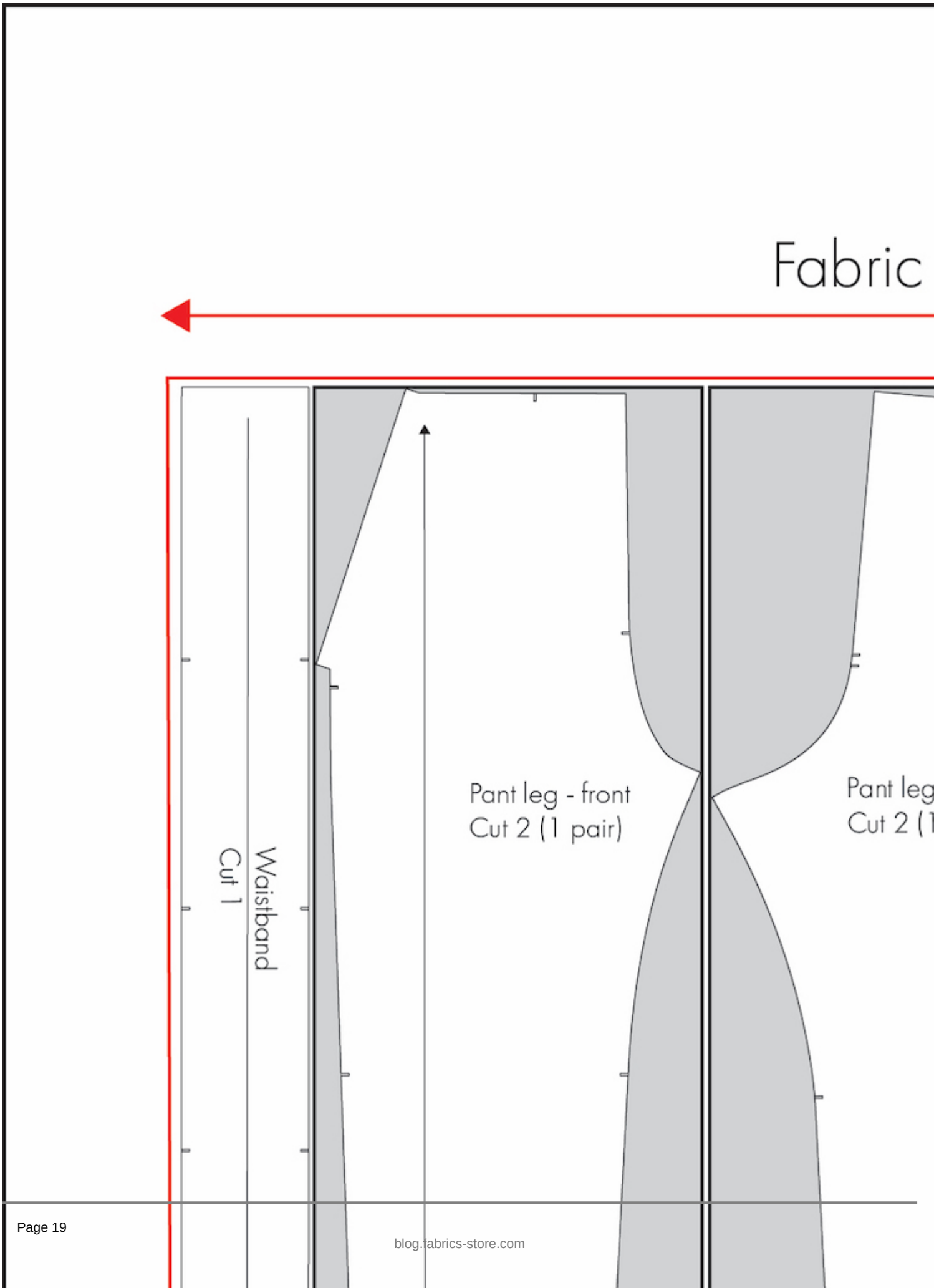
Fabric
Waistband
Cut 1
Pant leg - front
Cut 2 (1 pair)
Pant leg
Cut 2 (1

When is the mock layout method useful?

- When you are planning a project and donâ??t have the time or space to do a full mock layout.
- When you just want a rough estimateâ??particularly if youâ??re still drafting your own pattern and expect to make further changes.
- When working with simpler and more regular shaped pattern pieces.

Things to keep in mind

- *Additional materials:* Itâ??s easy to focus only on the main fabric, but donâ??t forget to factor in linings, facings, interfacing, bindings, or any other additional materials. You can use the same estimation methods for these as well.
- *Follow the grainline:* Always ensure the pattern pieces are aligned correctly with the grainline.
- *Allow for shrinkage:* Pre-wash the fabric before cutting. For a how to and additional tips on pre-washing, take a look at my article â??How to pre-wash fabric: A simple guideâ??.
- *Watch for print direction and pattern repeats:* Directional prints, stripes, plaids, and large-scale motifs may require extra fabric for proper placement and matching. Take time to plan how prints will sit on the body to ensure accurate alignment and avoid awkward placementsâ??especially at seams and centre fronts or backs.
- *Mind the nap:* Some fabrics, like velvet or corduroy, have a directional nap that affects how they reflect light or feel to touch. All pattern pieces should be cut in the same direction for a consistent look, which may require more fabric.

Ensuring you have the right amount of fabric for your sewing project involves a little bit of planning and consideration. By understanding your pattern requirements, measuring accurately, accounting for shrinkage, and double-checking your calculations, you will hopefully be able to estimate how much fabric you needâ??reducing the risk of running short or ending up with those

excess scraps.

CATEGORY

1. SEWING ESSENTIALS
2. TUTORIALS

Category

1. SEWING ESSENTIALS
2. TUTORIALS

Date Created
May 8, 2025
Author
emma-cartmel